Unit-3 Virtualization

Virtualization :- It is a techniques which allow to share single physical instance of an application or resource among multiple organization or customers.

→ All virtual resources will work independently.

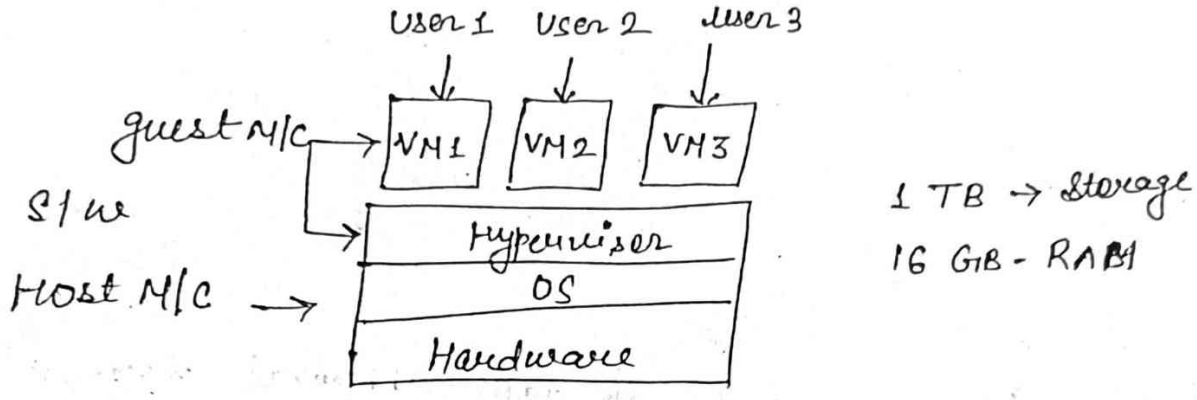

→ Host Machine or Guest Machine or Virtual Machine
↓
Main computer
↳ Machine on which virtual M/C going to be built

→ Hypervisor → Virtual Machine Monitor → it is
→ S/W that creates & run the VM's (Virtual Machine)
→ S/W used to create virtualization on physical machines.

Hypervisor are 2 Types :-

1) Hypervisor 1 (bare metal & native)
2) Hypervisor 2 (Host or Embedded)

Benefits :- 1) Better resource utilization
2) lower the cost of IT Infrastructure
3) Remote access
4) Pay per use
5) on demand

5) Enables to run multiple OS.

6) If one VM are not working or having any problem, others will not be affected.

7) <u>Partitioning</u> :- Separate different V.M. on single physical system.

8) <u>Isolation</u> :- Host & VM should be isolated (work independently)

9) <u>Encapsulation</u> :- V.M. should be encapsulate in a single file.

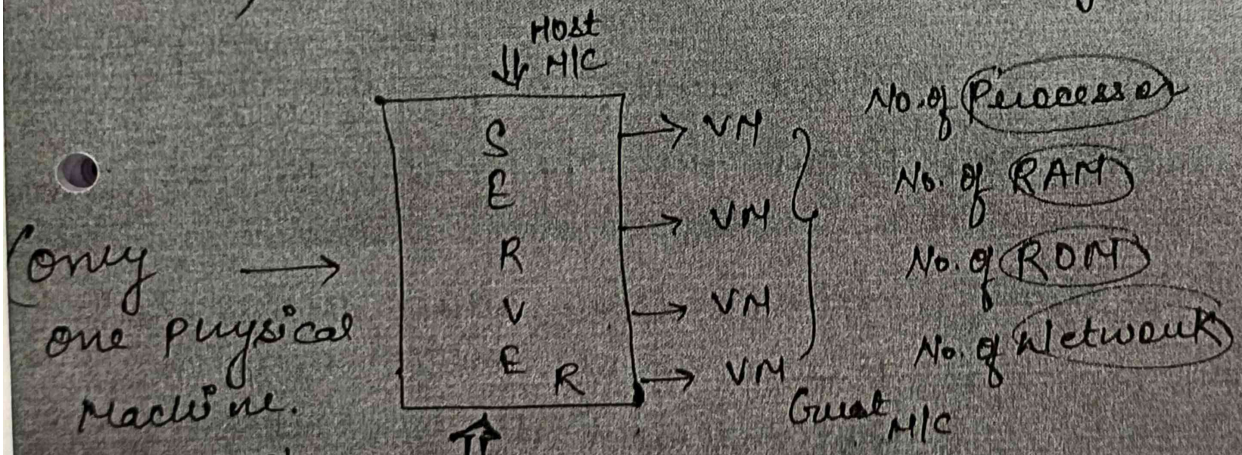

Implementation level of Virtualization :-

① **ISA :- Instruction Set Architecture :-**

This is used to run many legacy code written for a different hardware configuration. These codes run on any virtual machine using the ISA. It convert source code → H/w format.

② **Hardware Abstraction level :-** At this level we use hypervisor which is used for functioning. The virtual machine is formed at this level. It allow the virtualization of each of the hardware component, which could be Input-output devices, Memory, Processor, etc.

③ **Operating system level :-** It is capable of creating a layer that is abstract b/w Operating System and application.

→ It can use S/w & H/w

④ **Library level :-** It provide API (Application Programming Interfac

→ The API documented well, & provide proper communication from the application to the System

⑤ **Application level :-** It is used when there is desire to virtualize only one application & it is last level of virtualization. Generally used when run VM that use high level language.

Benefits / Advantage of Virtualization :-

1. Isolation :- Access Seperately, Independently.
2. Sharing :- Cost Saving.
3. Portability :- VM Move from One to another host.
4. Interoperability :- Easily Exchange the Infer"
5. Encapsulation :- Isolate
6. Increase Performance
7. Improve functionality
8. Improve Reliability & Security.
9. Maintain legacy application.
10. Virtualization is used to improve the throughput and cost of hardware.

Types of Virtualization :-

- Network Virtualization :- each application sees it's own logical network, independent of Physical network.

→ VLAN is example of network Virtualization.

→ In this we can Virtualized the N/W into VLAN is a Subsection of LAN, created with the Software (SDN) that combine N/W device into our group regardless of Physical location.

→ Network Virtualization is a multiple sub-n/w that could be Produced on a Similar Physical network.

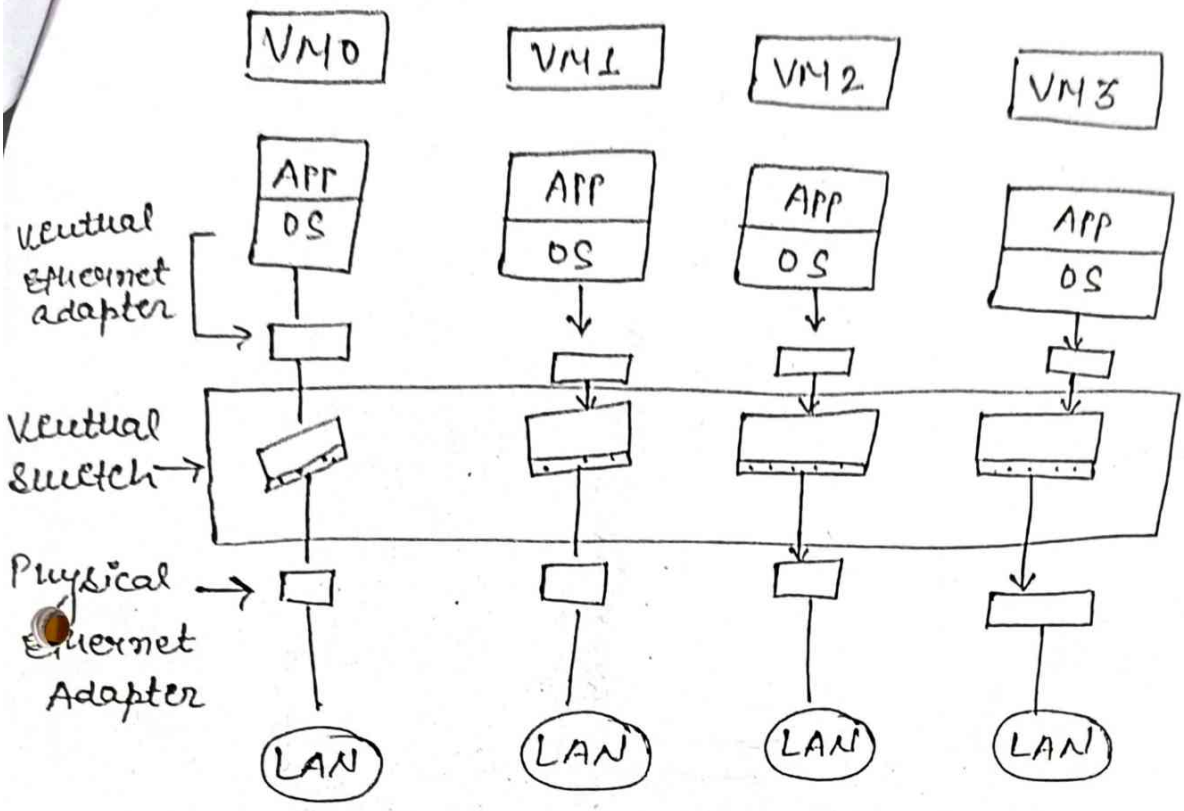

There are different component of N/W

1) NIC (Network Interface Card) :- Join the Cables, because there are different port to join the cables, like → UTP

2) HBA (Host bus Adapter) :- Fast communication because we use fiber cables.

3) CNA (Converge N/W Adapter) → Combination of NIC & HBA.

→ NV divides PNR among multiple VN's.

→ ENV or INV

↓ Combine one or more N/W into Virtual nets

✗ No External N/W,
✓ Single N/W Server

⇒ Komery ...

Desktop Virtualization :-

⇒ Cost

⇒ Security ⇒ flexibility

client → Data

Traditional Physical Desktop Environment	Remote Virtual Environment

Desktop Virtualization allow the user's OS to be remotely stored on a server in the data center. It allow the user to access their desktop virtually, from any location by a different machine. users who ~~have~~ want specific OS other than window server will ~~not~~ need to have virtual desktop. The main benefit of desktop virtualization are user mobility, portability, easy management of software installation, update & patches.

Server Virtualization :- The central server is divided into multiple different virtual server by changing the identity number, processor. each system can operate it OS in an isolated manner. each sub. server knows the identity of the central server. It cause an increase in performance & reduce the cost. It is beneficial in virtual migration, reducing energy consumption, reducing infrastructural costs etc.

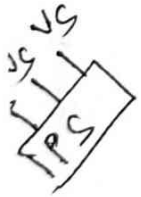

X——X——X——X——X——X——X——X

Scalability
Availability
Mandatory

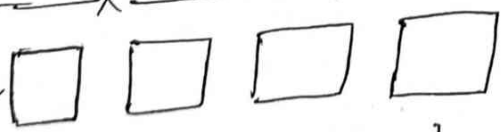

→ Seperate Storage

SSU → Single Storage UNIT

↓ user

I/O Device Virtualization :-

I/O virtualization involves managing the routing of I/O request b/w virtual device and shared physical Hardware.

There are 3 ways to implement I/O virtualization.

1. Full device emulation.
2. Para virtualization.
3. Direct I/O.

1. Full Device Emulation :- It approach well known, real world device

→ All the function of device such as device, enumeration, identification, interrupt, DMA & replicated in software.

→ This S/W is located in VMM & acts as a virtual device.

2. Para virtualization :- Mainly used in Xen.

It is known as the split driver model consisting of front end driver & back end driver.

→ The front driver manages I/O request of guest OS & The back end user / driver is responsible for managing the real I/O device.

Hypervisor :- it is software that helps in Hypervisor virtualization.

Virtual machine, VMM (Virtual Machine Monitor)

why? → More Resource, → but not utilize → Not optimum

24 Hours → only 2 Hours → Result → not expected

X → Social media
→ Insta

For better utilization we use hypervisor

Type :- 1 Bare metal :-

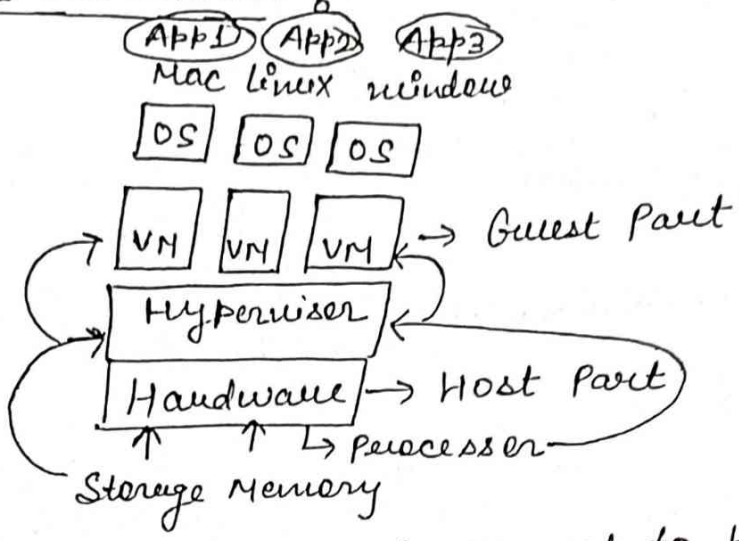

Type 2 :- Directly does not connect to Hardware.

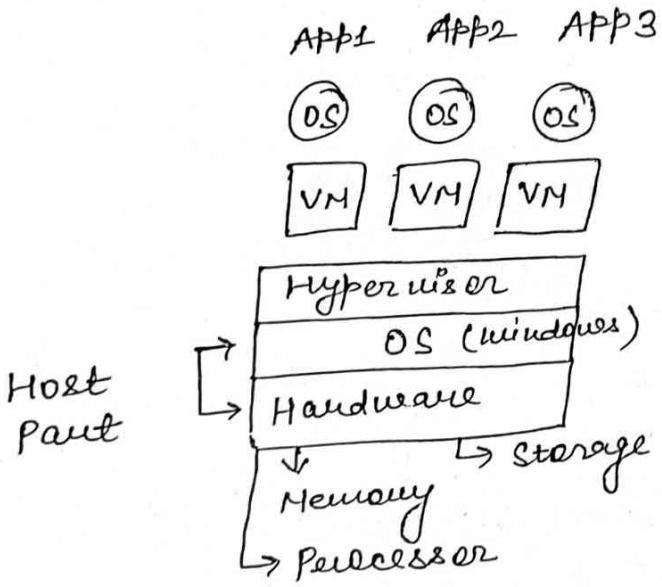

Vmware :- VMware is software, similar to Hypervisor. It start in market from 1998. with VMware, a hypervisor is installed on the physical server to allow for multiple VM's to run on the same physical server. each VM can run it own OS, which means multiple OS can run on one physical server. All the VM's on the same physical

Server share resources. such as networking & RAM. These types of workloads can be managed by the infrastructure team in the same way as virtual machine and the DevOps teams can deploy container as they were used to.

XEN :- It is also a type of hypervisor that enables the simultaneous creation, Management of multiple VMs on one Physical system. it is related to Type-1 hypervisor. Xen was developed by Xen source. which was purchased by Citrix System in 2007, Xen was release first time in 2003.
Xen virtual device driver for virtualization Xen hypervisor is free is under GNU, General public licence.

KVM :- Kernel-based virtual Machine is an open source technology based on linux. Basic difference b/w hypervisor + KVM is OS. It is also type-1 hypervisor.

Virtualization of CPU :- In CPU virtualization a single CPU act as if it was multipl CPU and provide services to the user. Multiple OS can be used by user side.